4.3 BJT Models & Circuit Analysis

4.3.1 DC Model: Ebers-Moll Model
- Current equations
- Equivalent Circuit

4.3.2 Small Signal Model
- Generalized Two-Port Model
- Hybrid-Pi Model

4.3.3 DC Model: Transport Model
- Model Equations

4.3.4 Single Transistor Amplifier Analysis
- AC/DC Analysis

Pierret, Chapter 11.1.4, page 403-407
Pierret, Chapter 12.1, page 443-449
Jaeger, Blalock, Chapter 5, page 217-274

4.3.1 Ebers-Moll Model
– Static Model for BJT –

From the previous static analysis, we obtain the following general expressions for I_E and I_C:

$$I_E = I_{En} + I_{Ep}$$

$$= \underbrace{\left(qA\frac{D_E}{L_E} n_{E0} + qA\frac{D_B}{L_B} p_{B0} \frac{\cosh\left(W/L_B\right)}{\sinh\left(W/L_B\right)} \right)}_{\equiv I_{F0}} \left(e^{qV_{EB}/kT} - 1 \right) - \underbrace{\left(qA\frac{D_B}{L_B} p_{B0} \frac{1}{\sinh\left(W/L_B\right)} \right)}_{\equiv \alpha_R I_{R0}} \left(e^{qV_{CB}/kT} - 1 \right)$$

$$I_C = I_{Cn} + I_{Cp}$$

$$= \underbrace{\left(qA\frac{D_B}{L_B} p_{B0} \frac{1}{\sinh\left(W/L_B\right)} \right)}_{\equiv \alpha_F I_{F0}} \left(e^{qV_{EB}/kT} - 1 \right) - \underbrace{\left(qA\frac{D_C}{L_C} n_{C0} + qA\frac{D_B}{L_B} p_{B0} \frac{\cosh\left(W/L_B\right)}{\sinh\left(W/L_B\right)} \right)}_{\equiv I_{R0}} \left(e^{qV_{CB}/kT} - 1 \right)$$

This way, the currents are expressed by two coupled junctions I-V characteristics with saturation currents I_{F0} and I_{R0}

BJT Modes of Operation

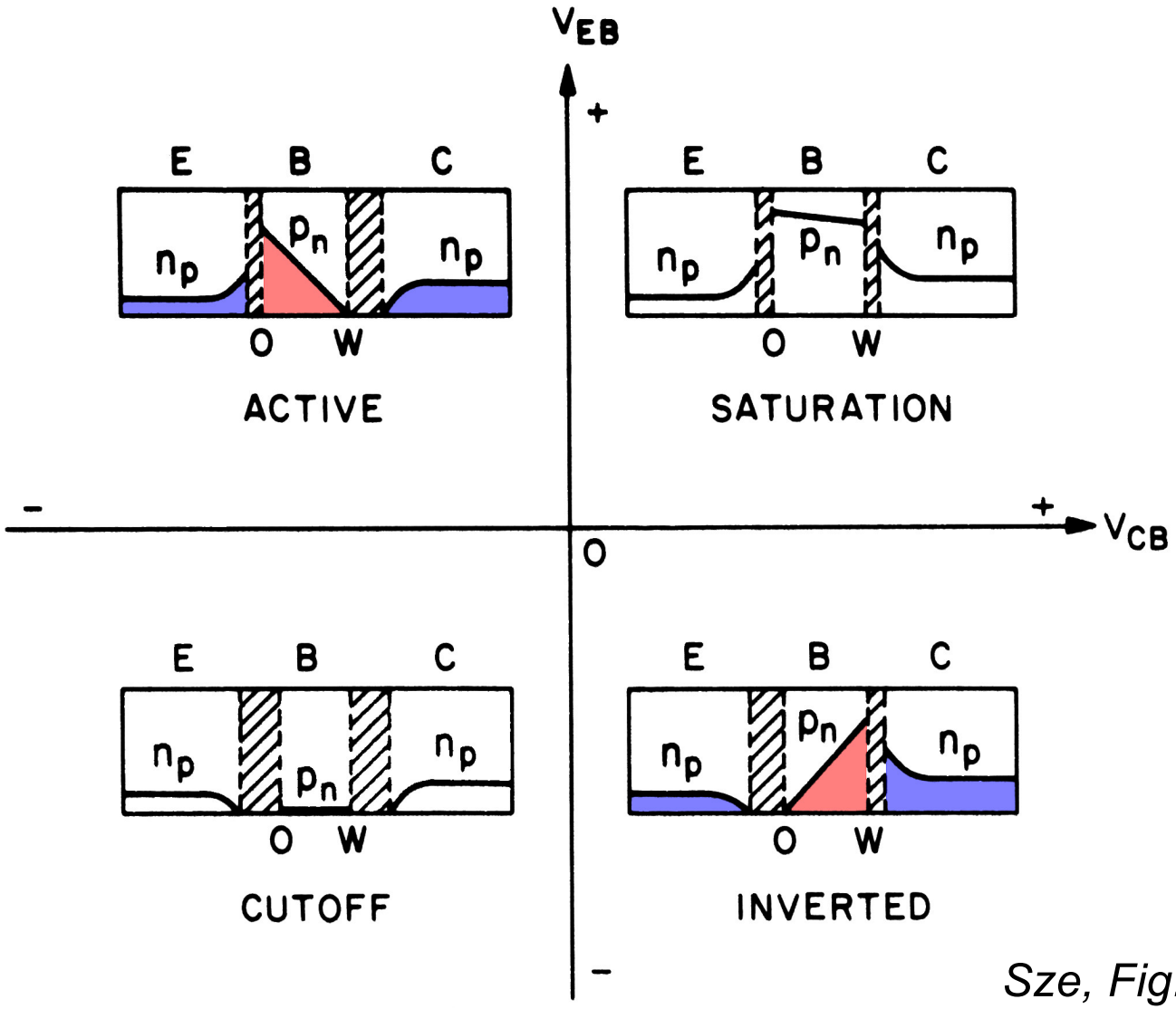

Sze, Fig. 5.7

Ebers-Moll Model

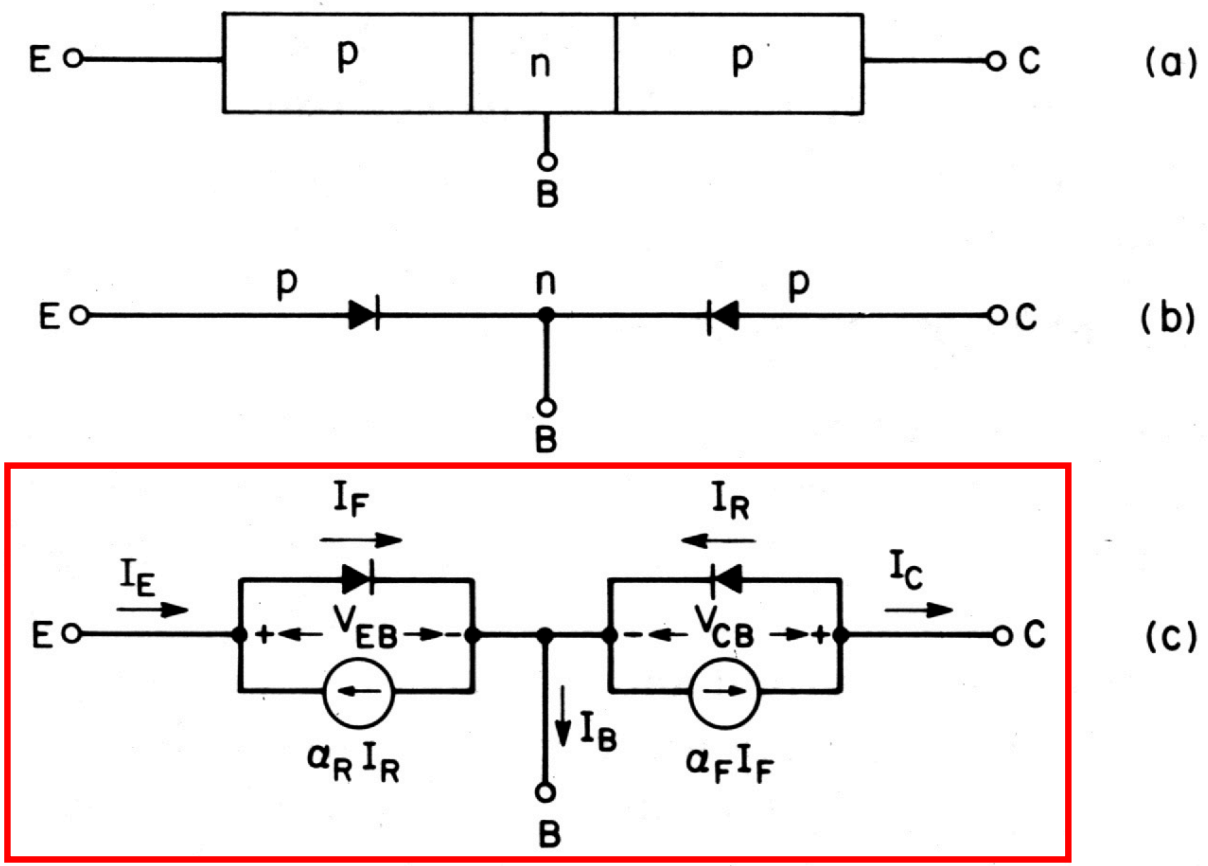

$$I_E = I_{F0}\left(e^{qV_{EB}/kT} - 1\right) - \alpha_R\, I_{R0}\left(e^{qV_{CB}/kT} - 1\right)$$

$$I_C = \alpha_F\, I_{F0}\left(e^{qV_{EB}/kT} - 1\right) - I_{R0}\left(e^{qV_{CB}/kT} - 1\right)$$

Ebers-Moll Modell

- Computer aided circuit analysis programs, such as SPICE, use these Ebers-Moll equations (or a modified form) to solve for dc operating point variables and to construct the BJT device characteristics
- The four parameters I_{F0}, I_{R0}, α_R, α_F are obtained from BJT characterization; actually, only three variables are required, because $\alpha_F I_{F0} = \alpha_R I_{R0}$ (see original current equations)
- Alternative static model for BJT: see 4.3.3

4.3.2 Small Signal Equivalent Circuit – Two-Port Model –

NPN BJT in common emitter configuration as **two-port device**:

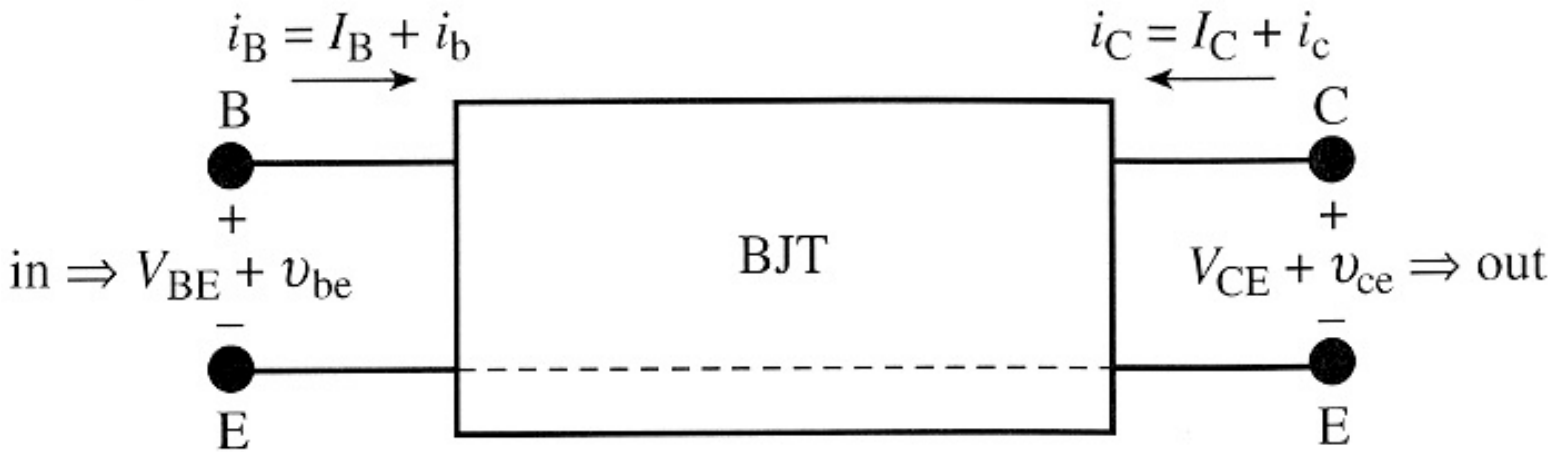

Pierret, Fig. 12.1

- DC voltages and currents: I_B, I_C, V_{BE}, V_{CE}
- Superimposed AC voltages and currents: $\bar{i}_b, \bar{i}_c, \bar{v}_{be}, \bar{v}_{ce}$

$$\boxed{\begin{aligned} i_B(V_{BE} + \bar{v}_{be}, V_{CE} + \bar{v}_{ce}) &= I_B(V_{BE}, V_{CE}) + \bar{i}_b \\ i_C(V_{BE} + \bar{v}_{be}, V_{CE} + \bar{v}_{ce}) &= I_C(V_{BE}, V_{CE}) + \bar{i}_c \end{aligned}}$$

Two-Port Model (cont.)

- **Assumption: low frequency**, i.e. carrier distributions can follow the frequency (no capacitance effects)
  Note: this is a strong assumption, which is generally not fulfilled!

$$i_B(V_{BE}+\bar{v}_{be}, V_{CE}+\bar{v}_{ce}) = I_B(V_{BE}+\bar{v}_{be}, V_{CE}+\bar{v}_{ce})$$

$$i_C(V_{BE}+\bar{v}_{be}, V_{CE}+\bar{v}_{ce}) = I_C(V_{BE}+\bar{v}_{be}, V_{CE}+\bar{v}_{ce})$$

- Comparing with the previous page, we find for $\bar{i}_b$:

$$\bar{i}_b = \overbrace{I_B(V_{BE}+\bar{v}_{be}, V_{CE}+\bar{v}_{ce})}^{\text{Taylor series for small } \bar{v}_{be}, \bar{v}_{ce}} - I_B(V_{BE}, V_{CE})$$

$$\approx \left.\frac{\partial I_B(V_{BE}, V_{CE})}{\partial V_{BE}}\right|_{V_{CE}} \bar{v}_{be} + \left.\frac{\partial I_B(V_{BE}, V_{CE})}{\partial V_{CE}}\right|_{V_{BE}} \bar{v}_{ce}$$

Two-Port Model (cont.)

- Analogues, we find for i_c:

$$\bar{i}_c \approx \left.\frac{\partial I_C(V_{BE},V_{CE})}{\partial V_{BE}}\right|_{V_{CE}} \bar{v}_{be} + \left.\frac{\partial I_C(V_{BE},V_{CE})}{\partial V_{CE}}\right|_{V_{BE}} \bar{v}_{ce}$$

- This leads to the following general **small signal equivalent circuit**:

$$\boxed{\begin{aligned} \bar{i}_b &= g_{11}\,\bar{v}_{be} + g_{12}\,\bar{v}_{ce} \\ \bar{i}_c &= g_{21}\,\bar{v}_{be} + g_{22}\,\bar{v}_{ce} \end{aligned}}$$

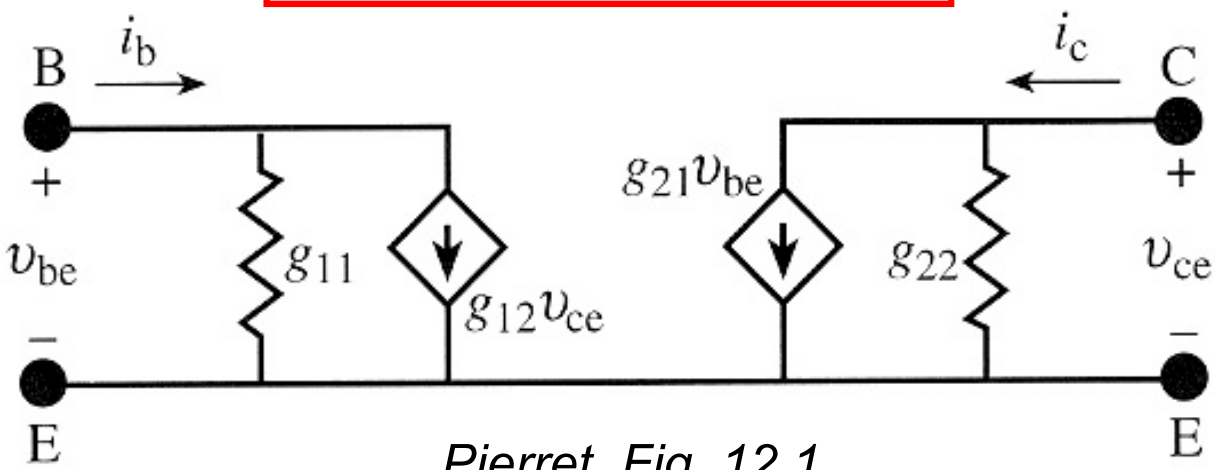

Pierret, Fig. 12.1

Two-Port Model (cont.)

- So far, the two-port model is purely mathematical; the physics lies in the conductances g_{ij}! They must be calculated from appropriate models for I_C and I_B; in case of **npn BJT**:

$$+I_B \text{ in}: \quad g_{11} \equiv \left.\frac{\partial I_B}{\partial V_{BE}}\right|_{V_{CE}} \qquad g_{12} \equiv \left.\frac{\partial I_B}{\partial V_{CE}}\right|_{V_{BE}}$$

$$+I_C \text{ in}: \quad g_{21} \equiv \left.\frac{\partial I_C}{\partial V_{BE}}\right|_{V_{CE}} \qquad g_{22} \equiv \left.\frac{\partial I_C}{\partial V_{CE}}\right|_{V_{BE}}$$

- I_C and I_B from e.g. static analysis of Chapter 4.2

Two-Port Model (cont.)

- Analogous, we obtain in case of a **pnp BJT**:

$$+I_B \text{ out}: \quad g_{11} \equiv \left.\frac{\partial I_B}{\partial V_{EB}}\right|_{V_{EC}} \qquad g_{12} \equiv \left.\frac{\partial I_B}{\partial V_{EC}}\right|_{V_{EB}}$$

$$+I_C \text{ out}: \quad g_{21} \equiv \left.\frac{\partial I_C}{\partial V_{EB}}\right|_{V_{EC}} \qquad g_{22} \equiv \left.\frac{\partial I_C}{\partial V_{EC}}\right|_{V_{EB}}$$

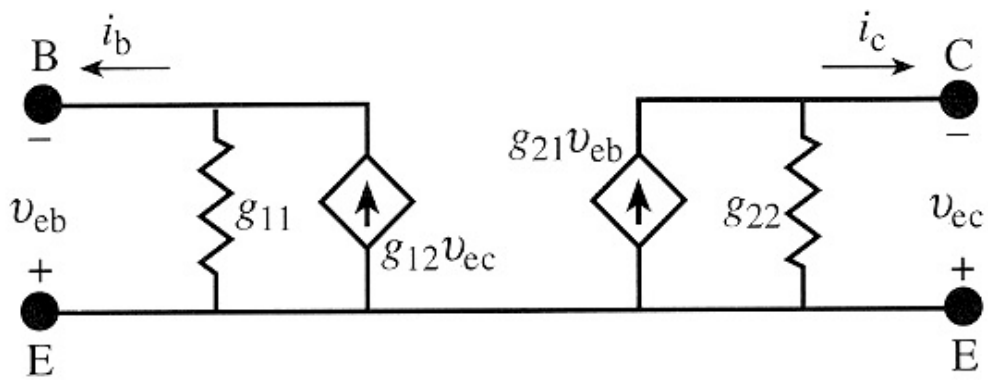

adapted from Pierret, Fig. 12.1

Two-Port Model – Active Mode

- **Assumption**: npn transistor in active mode, i.e. $V_{BE} > 0$ and $V_{BC} < 0$
- From **Ebers-Moll model**, we find:

$$I_E \cong I_{F0}\, e^{qV_{BE}/kT}$$

$$I_C \cong \alpha_F\, I_{F0}\, e^{qV_{BE}/kT}$$

$$I_B = I_E - I_C \cong (1-\alpha_F)\, I_{F0}\, e^{qV_{BE}/kT}$$

- Using these characteristic equations, the conductances g_{ij} are calculated:

Two-Port Model – Active Mode (cont.)

$$g_{11} \equiv \left.\frac{\partial I_B}{\partial V_{BE}}\right|_{V_{CE}} = \frac{q\,I_B}{kT} = \underbrace{\frac{I_B}{I_C}}_{=\beta_0^{-1}}\, g_{21}$$

$$g_{12} \equiv \left.\frac{\partial I_B}{\partial V_{CE}}\right|_{V_{BE}} = 0$$

$$g_{21} \equiv \left.\frac{\partial I_C}{\partial V_{BE}}\right|_{V_{CE}} = \frac{q\,I_C}{kT}$$

$$g_{22} \equiv \left.\frac{\partial I_C}{\partial V_{CE}}\right|_{V_{BE}} = 0$$

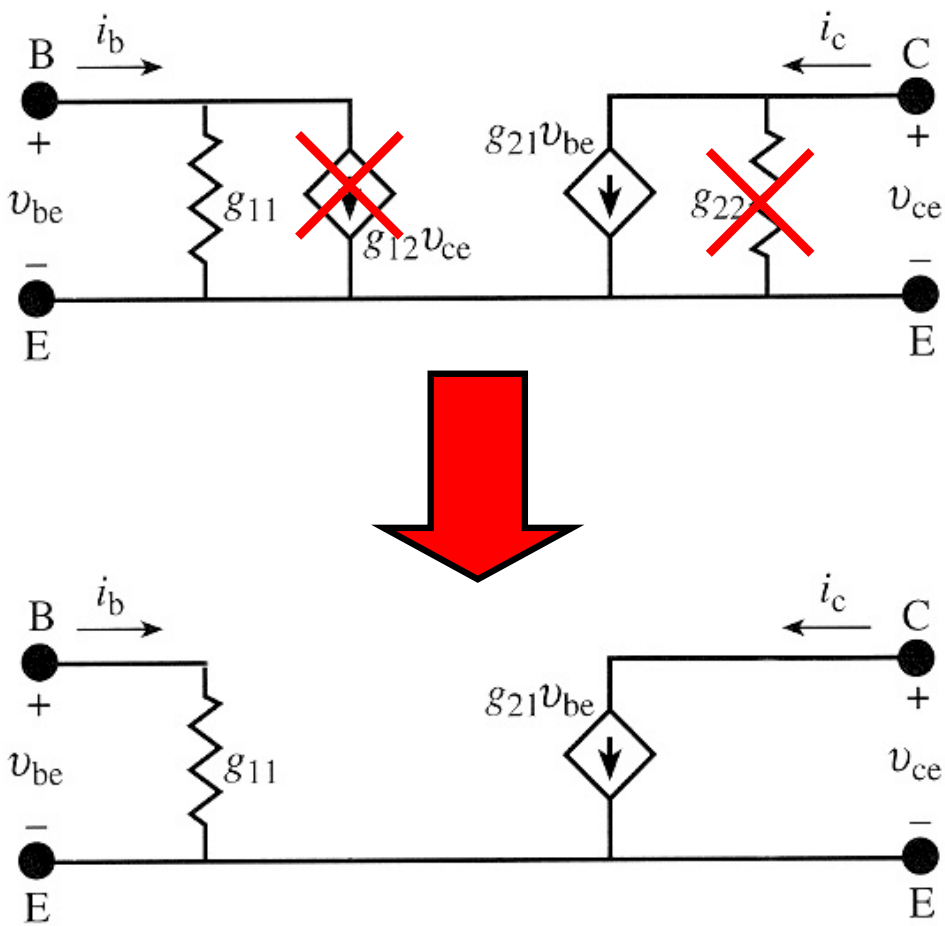

Hybrid-π Model

- Hybrid-Pi model is most frequently used model for performing **BJT small signal analysis**
- **Hybrid**: combination of resistances and conductances
  π: π-arrangement of elements

- Hybrid-π equivalent circuits
  a) Simplified low-frequency
  b) Complete low-frequency
  c) High-frequency

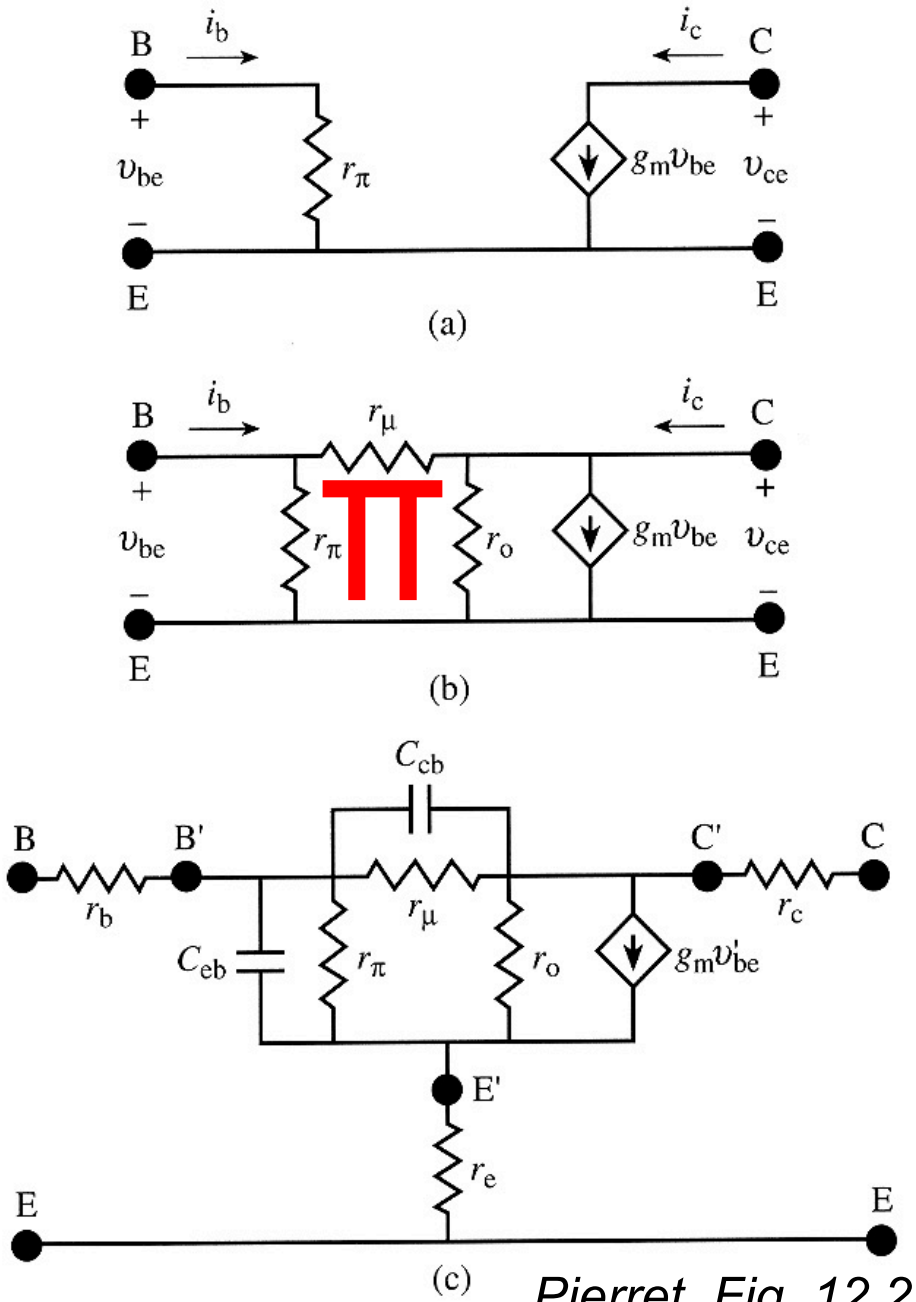

Pierret, Fig. 12.2

Simplified Hybrid-π Model

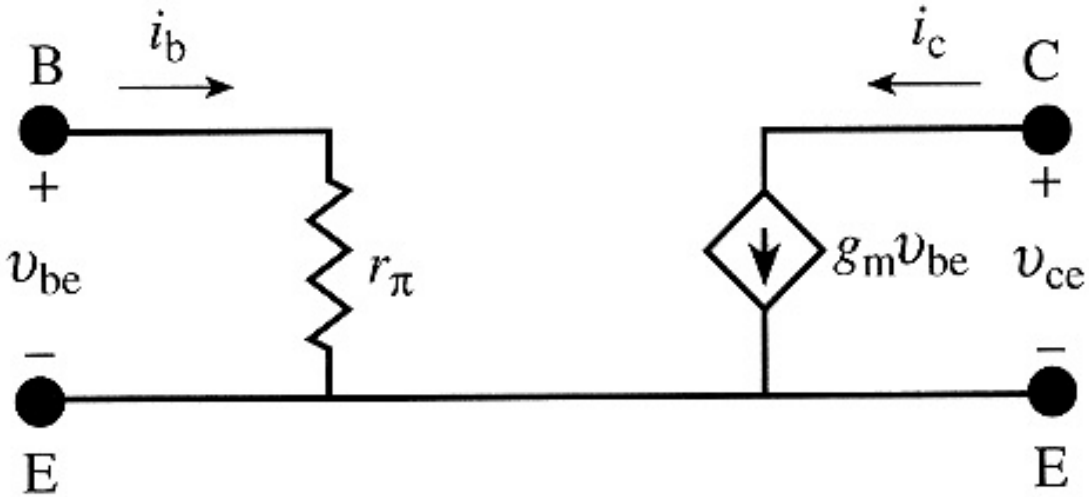

$$\bar{i}_b = \frac{1}{r_\pi}\bar{v}_{be}$$

$$\bar{i}_c = g_m \bar{v}_{be}$$

- Equivalent to two-port model "simplification" for active mode
- By comparison, one obtains for the **input resistance r_π** and the **transconductance g_m**:
- Note: r_π and g_m depend on the DC operating point!

$$r_\pi = g_{11}^{-1} = \left[\left.\frac{\partial I_B}{\partial V_{BE}}\right|_{V_{CE}}\right]^{-1} = \frac{kT}{q I_B} = \frac{I_C}{I_B}\frac{1}{g_m} = \frac{\beta_0}{g_m}$$

$$g_m = g_{21} = \left.\frac{\partial I_C}{\partial V_{BE}}\right|_{V_{CE}} = \frac{q I_C}{kT}$$

Complete Hybrid-π Model

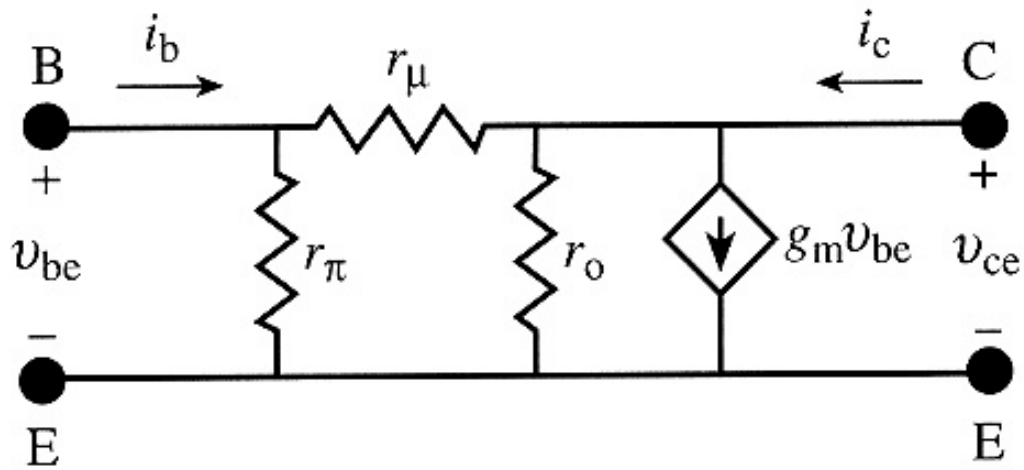

- Implementing base-width modulation and allowing more precise analysis
- Additional circuit components:
  - **Output resistance r_0**
  - **Feedthrough resistance r_μ**
- Circuit parameters can be related to two-port parameters:

$$g_m = g_{21} - g_{12} \quad r_0 = 1/(g_{22} + g_{12}) \quad r_\pi = 1/(g_{11} + g_{12}) \quad r_\mu = 1/g_{12}$$

High-Frequency Hybrid-π Model

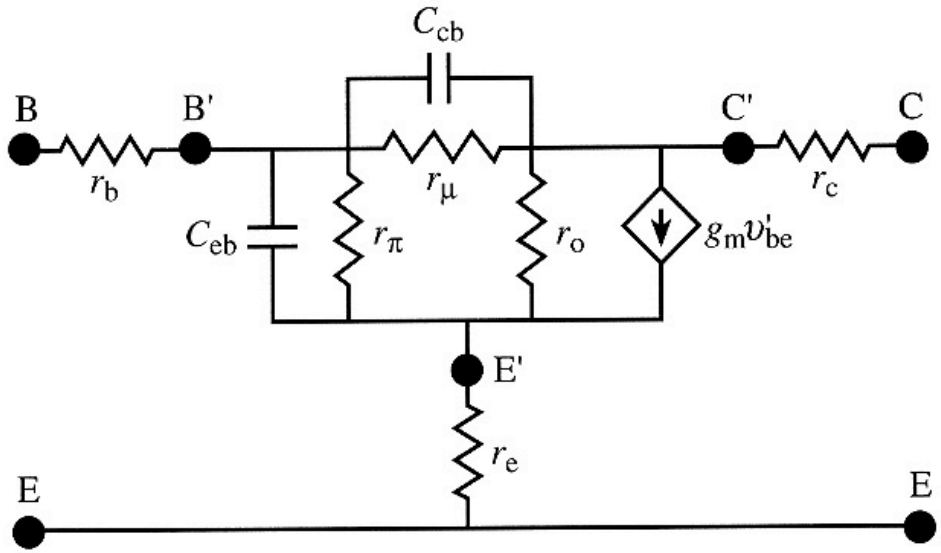

- Model valid for frequencies up to about 500 MHz (at higher frequencies delays in signal propagation have to be accounted for)
- Additional circuit components:
  - **Parasitic series resistances r_e, r_b, and r_c**
  - **Junction capacitances C_{cb}, C_{eb}**
    Reverse-biased C-B junction: C_{cb} is primarly junction C
    Forward-biased E-B junction: C_{eb} includes junction and diffusion C

4.3.3 BJT Transport Model

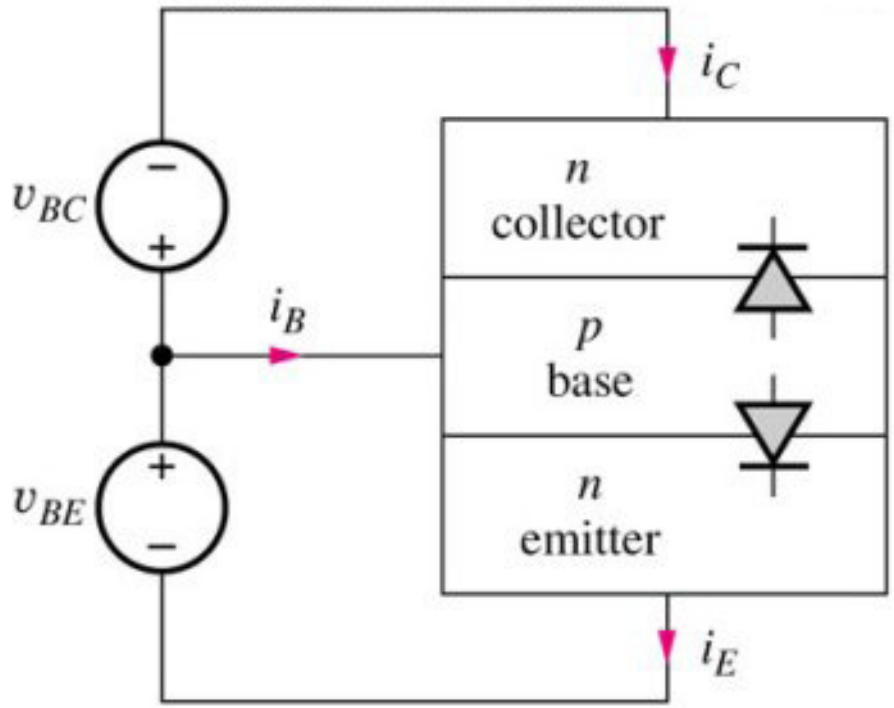

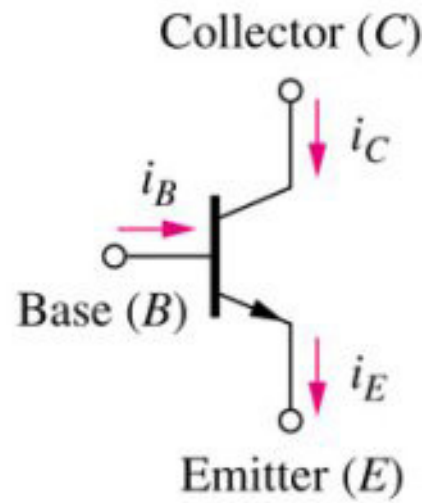

Jaeger, Blalock, Fig. 5.2

- Goal: Development of (simple) mathematical model describing the BJT I-V characteristic
- Assumption: npn transistor with currents and voltages defined as above
- Model construction by **superposition of currents**

Forward Characteristic (V_{BC} = 0)

- Base-emitter voltage V_{BE} establishes forward-current flow through emitter-base junction with two components:
- The larger component, the **forward-transport current I_F**, consists of electrons injected into the base, diffusing across it and swept into the collector (note: current flow is other way round!); this component constitutes the collector current I_C

$$I_C = I_F = I_S\left[e^{qV_{BE}/kT} - 1\right]$$

- The smaller current across the emitter base junction forms the base current I_B

$$I_B = \frac{I_F}{\beta_F} = \frac{I_S}{\beta_F}\left[e^{qV_{BE}/kT} - 1\right]$$

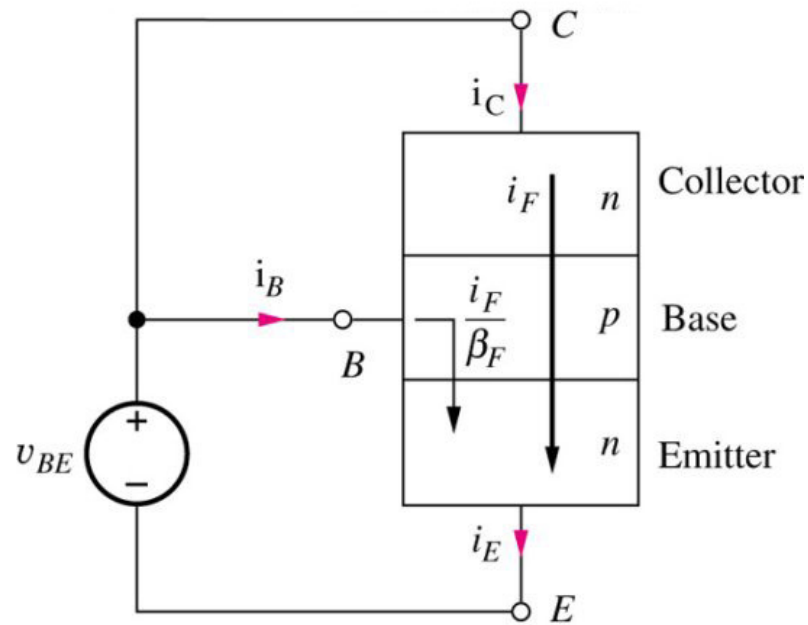

Jaeger, Blalock, Fig. 5.3

Transistor saturation current I_S

Typ. $10^{-18} \le I_S \le 10^{-9}$ A

Forward common-emitter current gain β_F

Typ. $20 \le \beta_F \le 500$

Forward Characteristic (V_{BC} = 0)

- Using KCL, we calculate the emitter current $I_E = I_C + I_B$

$$I_E = \left(I_S + \frac{I_S}{\beta_F}\right)\left[e^{qV_{BE}/kT} - 1\right] = I_S \underbrace{\left(\frac{\beta_F + 1}{\beta_F}\right)}_{\equiv \alpha_F^{-1}}\left[e^{qV_{BE}/kT} - 1\right]$$

with the **forward common-base current gain α_F**
(typ. $0.95 \le \alpha_F \le 1.0$)

$$\alpha_F = \frac{\beta_F}{\beta_F + 1} \qquad \beta_F = \frac{\alpha_F}{1 - \alpha_F}$$

- Note: β_F is our previous common-emitter current gain β_0; α_F is our previous common-base current gain α_0
- We also find the following three relations

$$I_C = \beta_F I_B \qquad I_C = \alpha_F I_E \qquad I_E = \left(\beta_F + 1\right) I_B$$

Reverse Characteristic ($V_{BE} = 0$)

- Base-collector voltage V_{BC} establishes forward-current flow through collector-base junction with two components:
- The larger component, the **reverse-transport current I_R**, consists of electrons injected into the base from the collector, diffusing across it and swept into the emitter (note: current flow is other way round!); this component constitutes now the collector current I_E

$$I_E = -I_R = -I_S\left[e^{qV_{BC}/kT} - 1\right]$$

- The smaller current across the collector base junction forms again the base current I_B

$$I_B = \frac{I_R}{\beta_R} = \frac{I_S}{\beta_R}\left[e^{qV_{BC}/kT} - 1\right]$$

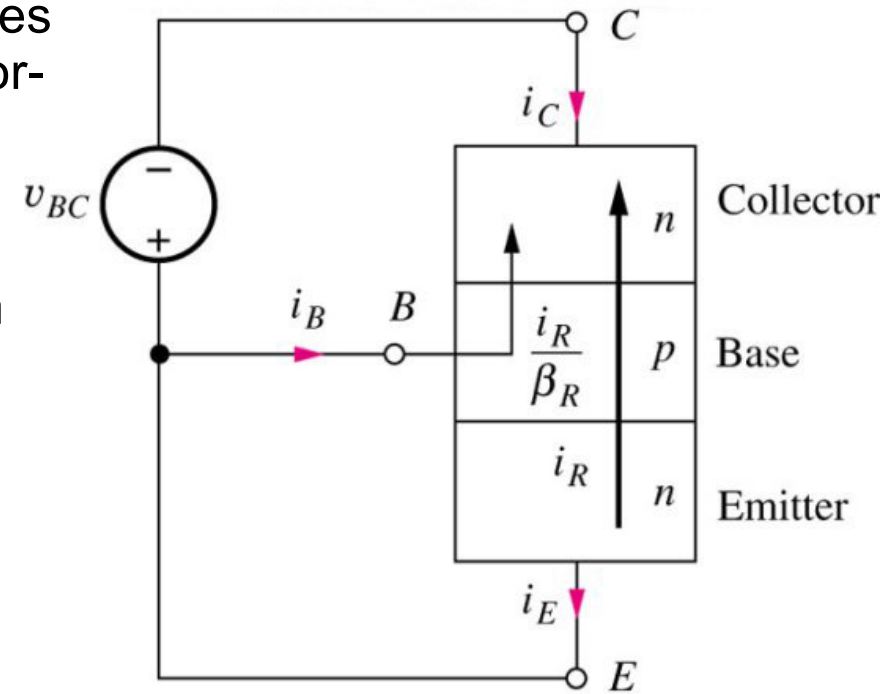

Jaeger, Blalock, Fig. 5.4

Reverse common-emitter current gain β_R

Typ. $0 \le \beta_R \le 20$

Reverse Characteristic (V_{BE} = 0)

- Using KCL, we calculate the emitter current $I_C = I_E - I_B$

$$I_C = \left(-I_S - \frac{I_S}{\beta_R}\right)\left[e^{qV_{BC}/kT} - 1\right] = -I_S \underbrace{\left(\frac{\beta_R + 1}{\beta_R}\right)}_{\equiv \alpha_R^{-1}}\left[e^{qV_{BC}/kT} - 1\right]$$

with the **reverse common-base current gain α_R**
(typ. $0 \le \alpha_R \le 0.95$)

$$\alpha_R = \frac{\beta_R}{\beta_R + 1} \qquad \beta_R = \frac{\alpha_R}{1 - \alpha_R}$$

- Super-positioning the solutions for the forward and reverse characteristics yields the complete **Transport Model Equations**

Transport Model Equations
for NPN BJT

$$I_{E,forward} = \left(I_S + \frac{I_S}{\beta_F}\right)\left[e^{qV_{BE}/kT} - 1\right]$$

$$I_{E,reverse} = -I_S\left[e^{qV_{BC}/kT} - 1\right]$$

$$\boxed{I_E = \underbrace{I_S\left[e^{qV_{BE}/kT} - e^{qV_{BC}/kT}\right]}_{\equiv I_T} + \frac{I_S}{\beta_F}\left[e^{qV_{BE}/kT} - 1\right]}$$

$$I_{C,forward} = I_S\left[e^{qV_{BE}/kT} - 1\right]$$

$$I_{C,reverse} = \left(-I_S - \frac{I_S}{\beta_R}\right)\left[e^{qV_{BC}/kT} - 1\right]$$

$$\boxed{I_C = \underbrace{I_S\left[e^{qV_{BE}/kT} - e^{qV_{BC}/kT}\right]}_{\equiv I_T} - \frac{I_S}{\beta_R}\left[e^{qV_{BC}/kT} - 1\right]}$$

$$I_{B,forward} = \frac{I_S}{\beta_F}\left[e^{qV_{BE}/kT} - 1\right]$$

$$I_{B,reverse} = \frac{I_S}{\beta_R}\left[e^{qV_{BC}/kT} - 1\right]$$

$$\boxed{I_B = \frac{I_S}{\beta_F}\left[e^{qV_{BE}/kT} - 1\right] + \frac{I_S}{\beta_R}\left[e^{qV_{BC}/kT} - 1\right]}$$

Transport Model Equations
for PNP BJT

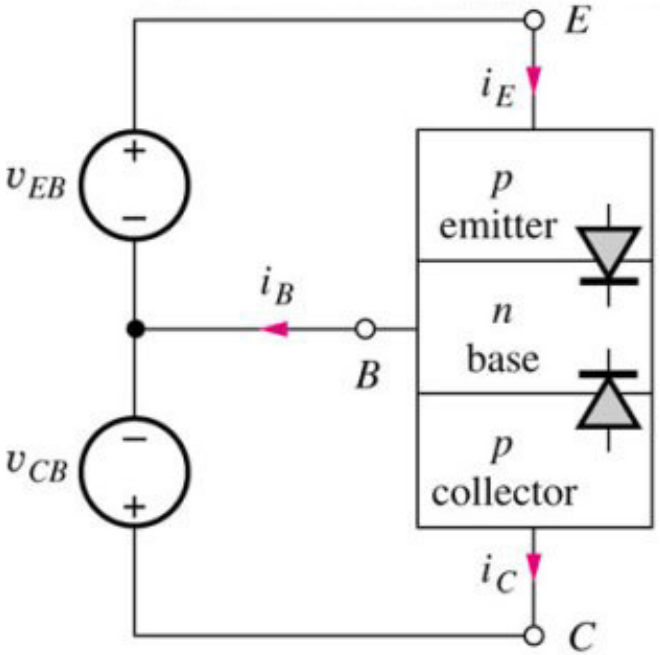

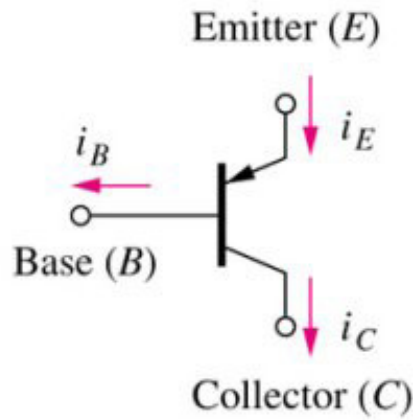

Jaeger, Blalock, Fig. 5.6

- Exchange subscript indices of voltages:
  - V_{BE} becomes V_{EB}
  - V_{BC} becomes V_{CB}

$$I_E = I_S\left[e^{qV_{EB}/kT} - e^{qV_{CB}/kT}\right] + \frac{I_S}{\beta_F}\left[e^{qV_{EB}/kT} - 1\right]$$

$$I_C = I_S\left[e^{qV_{EB}/kT} - e^{qV_{CB}/kT}\right] - \frac{I_S}{\beta_R}\left[e^{qV_{CB}/kT} - 1\right]$$

$$I_B = \frac{I_S}{\beta_F}\left[e^{qV_{EB}/kT} - 1\right] + \frac{I_S}{\beta_R}\left[e^{qV_{CB}/kT} - 1\right]$$

Transport Model
– Equivalent Circuit –

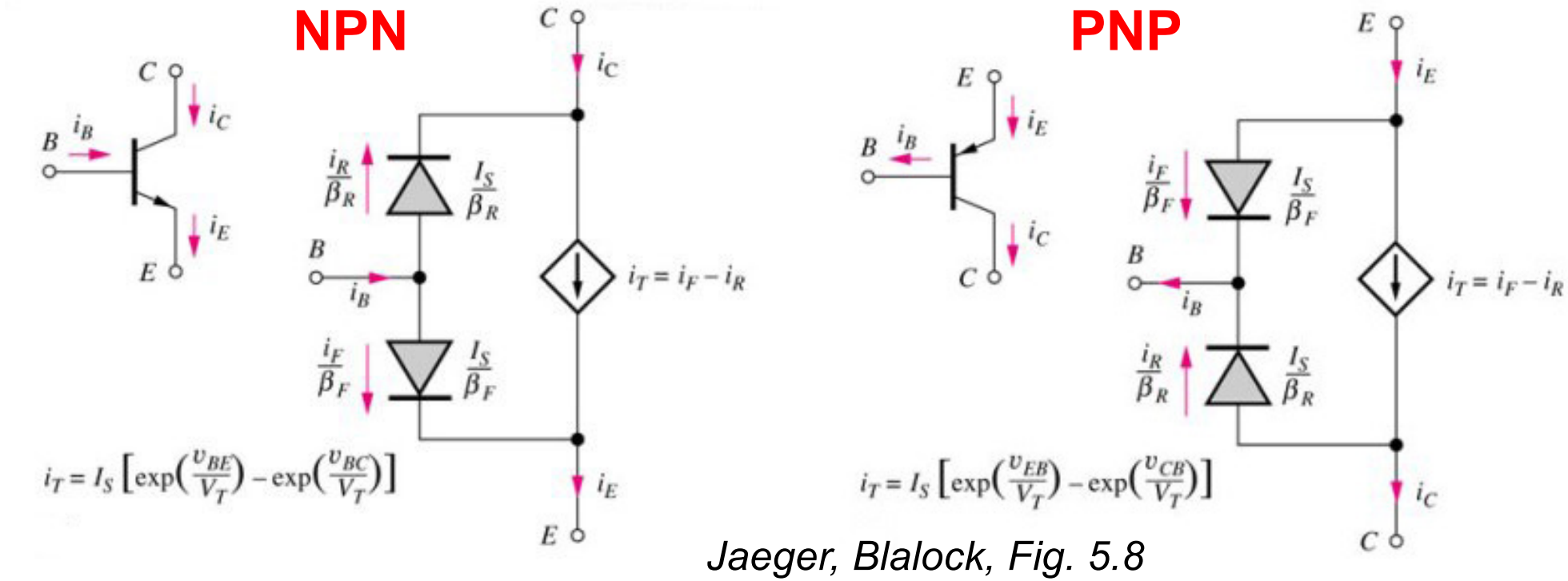

Jaeger, Blalock, Fig. 5.8

- Diode currents form the two base current components
- Current being transported completely across the base region of the transistor I_T is modeled by (voltage controlled) current source

Transport Model Simplifications
– Cutoff Region: $V_{BE} < 0$ V and $V_{BC} < 0$ V –

$$I_E = I_S\left[\cancel{e^{qV_{BE}/kT}} - \cancel{e^{qV_{BC}/kT}}\right] + \frac{I_S}{\beta_F}\left[\cancel{e^{qV_{BE}/kT}} - 1\right] = -\frac{I_S}{\beta_F}$$

$$I_C = I_S\left[\cancel{e^{qV_{BE}/kT}} - \cancel{e^{qV_{BC}/kT}}\right] - \frac{I_S}{\beta_R}\left[\cancel{e^{qV_{BC}/kT}} - 1\right] = \frac{I_S}{\beta_R}$$

$$I_B = \frac{I_S}{\beta_F}\left[\cancel{e^{qV_{BE}/kT}} - 1\right] + \frac{I_S}{\beta_R}\left[\cancel{e^{qV_{BC}/kT}} - 1\right] = -\frac{I_S}{\beta_F} - \frac{I_S}{\beta_R}$$

- Two reverse biased junctions with small reverse currents flowing
- Cutoff region is **open switch**

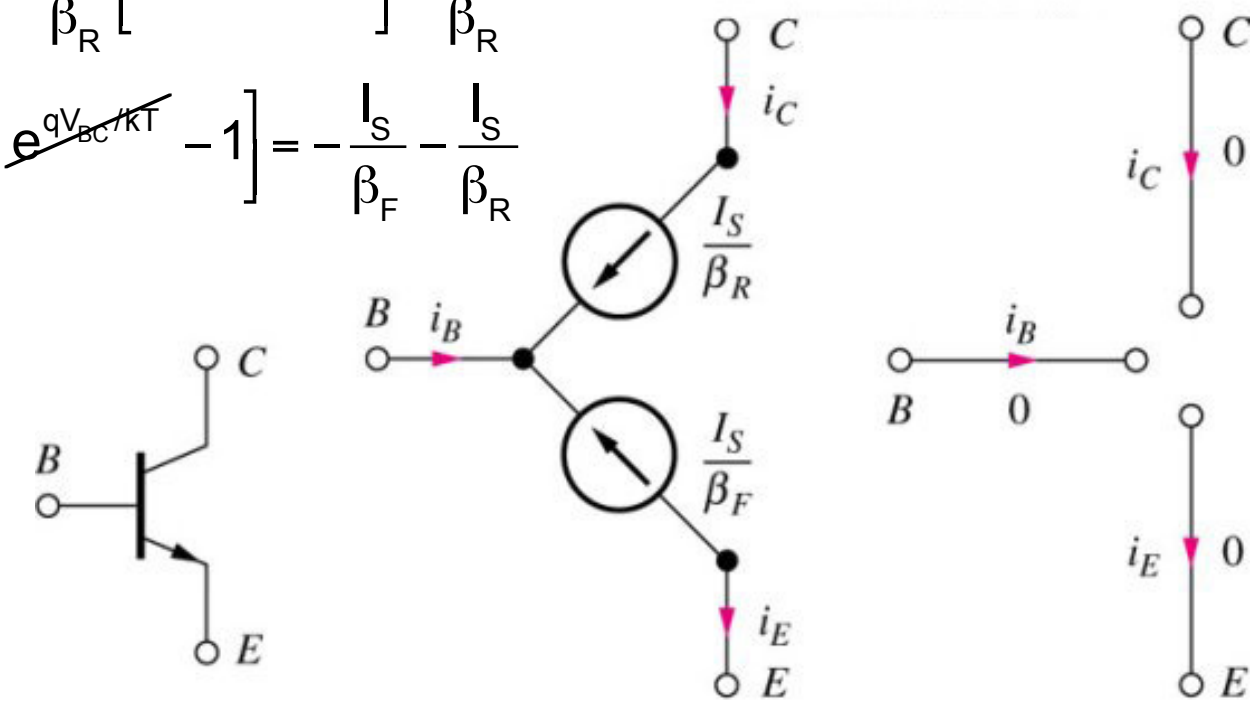

Jaeger, Blalock, Fig. 5.14

Transport Model Simplifications

– Forward Active Region: $V_{BE} > 0$ V and $V_{BC} < 0$ V –

$$I_E = I_S\left[e^{qV_{BE}/kT} - \cancel{e^{qV_{BC}/kT}}\right] + \frac{I_S}{\beta_F}\left[e^{qV_{BE}/kT} - 1\right] = \frac{I_S}{\alpha_F}\left[e^{qV_{BE}/kT}\right] - \cancel{\frac{I_S}{\beta_F}} \approx \frac{I_S}{\alpha_F}\left[e^{qV_{BE}/kT}\right]$$

$$I_C = I_S\left[e^{qV_{BE}/kT} - \cancel{e^{qV_{BC}/kT}}\right] - \frac{I_S}{\beta_R}\left[\cancel{e^{qV_{BC}/kT}} - 1\right] = I_S\left[e^{qV_{BE}/kT}\right] + \cancel{\frac{I_S}{\beta_R}} \approx I_S\left[e^{qV_{BE}/kT}\right]$$

$$I_B = \frac{I_S}{\beta_F}\left[e^{qV_{BE}/kT} - 1\right] + \frac{I_S}{\beta_R}\left[\cancel{e^{qV_{BC}/kT}} - 1\right] = \frac{I_S}{\beta_F}\left[e^{qV_{BE}/kT}\right] - \cancel{\frac{I_S}{\beta_R}} - \cancel{\frac{I_S}{\beta_F}} \approx \frac{I_S}{\beta_F}\left[e^{qV_{BE}/kT}\right]$$

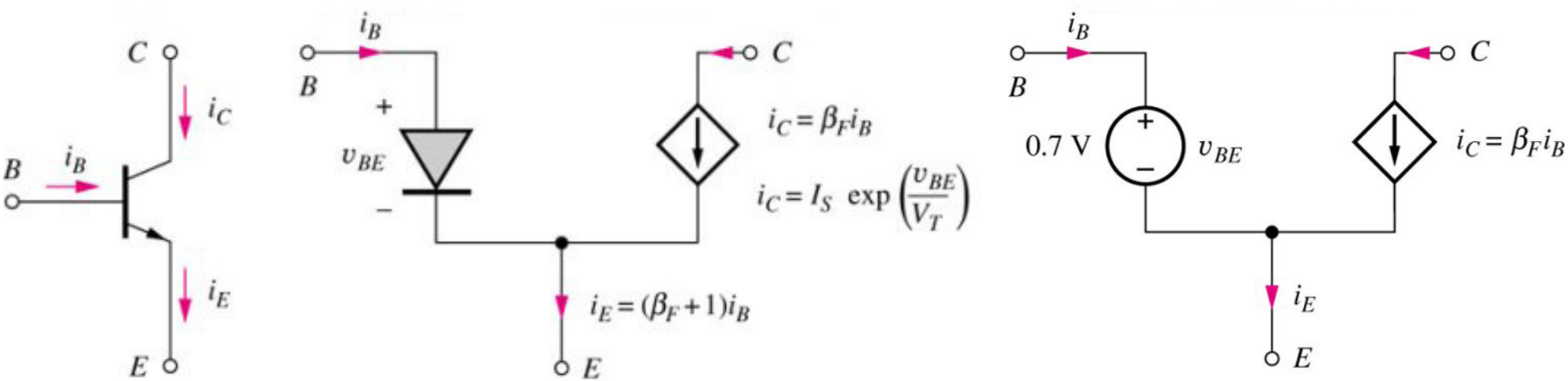

Jaeger, Blalock, Fig. 5.17

Transport Model Simplifications

– Reverse Active Region: $V_{BE} < 0$ V and $V_{BC} > 0$ V –

$$I_E = I_S\left[\cancel{e^{qV_{BE}/kT}} - e^{qV_{BC}/kT}\right] + \frac{I_S}{\beta_F}\left[\cancel{e^{qV_{BE}/kT}} - 1\right] = -I_S\left[e^{qV_{BC}/kT}\right] - \cancel{\frac{I_S}{\beta_F}} \approx -I_S\left[e^{qV_{BC}/kT}\right]$$

$$I_C = I_S\left[\cancel{e^{qV_{BE}/kT}} - e^{qV_{BC}/kT}\right] - \frac{I_S}{\beta_R}\left[e^{qV_{BC}/kT} - 1\right] = -\left(I_S + \frac{I_S}{\beta_R}\right)\left[e^{qV_{BC}/kT}\right] + \cancel{\frac{I_S}{\beta_R}} \approx -\frac{I_S}{\alpha_R}\left[e^{qV_{BC}/kT}\right]$$

$$I_B = \frac{I_S}{\beta_F}\left[\cancel{e^{qV_{BE}/kT}} - 1\right] + \frac{I_S}{\beta_R}\left[e^{qV_{BC}/kT} - 1\right] = \frac{I_S}{\beta_R}\left[e^{qV_{BC}/kT}\right] - \cancel{\frac{I_S}{\beta_R}} - \cancel{\frac{I_S}{\beta_F}} \approx \frac{I_S}{\beta_R}\left[e^{qV_{BC}/kT}\right]$$

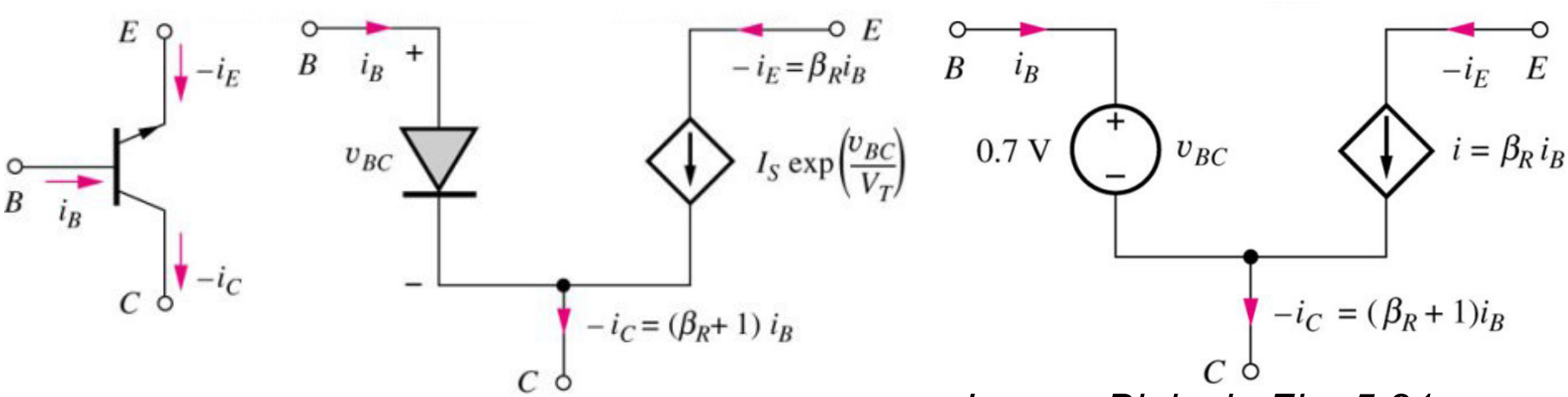

Jaeger, Blalock, Fig. 5.21

Transport Model Simplifications

– Saturation Region: $V_{BE} > 0$ V and $V_{BC} > 0$ V –

$$\left.\begin{aligned} I_C &= I_S\left[e^{qV_{BE}/kT}\right] - \frac{I_S}{\alpha_R}\left[e^{qV_{BC}/kT}\right] \\ I_B &= \frac{I_S}{\beta_F}\left[e^{qV_{BE}/kT}\right] + \frac{I_S}{\beta_R}\left[e^{qV_{BC}/kT}\right] \end{aligned}\right\} \quad V_{CEsat} = V_{CE} = V_{BE} - V_{BC} = \underbrace{\frac{kT}{q}\ln\left[\frac{1}{\alpha_R}\frac{1+\dfrac{I_C}{(\beta_R+1)I_B}}{1-\dfrac{I_C}{\beta_F I_B}}\right]}_{\text{for } I_B > \frac{I_C}{\beta_F}}$$

- Two forward biased junctions
- Saturation region is **closed switch**

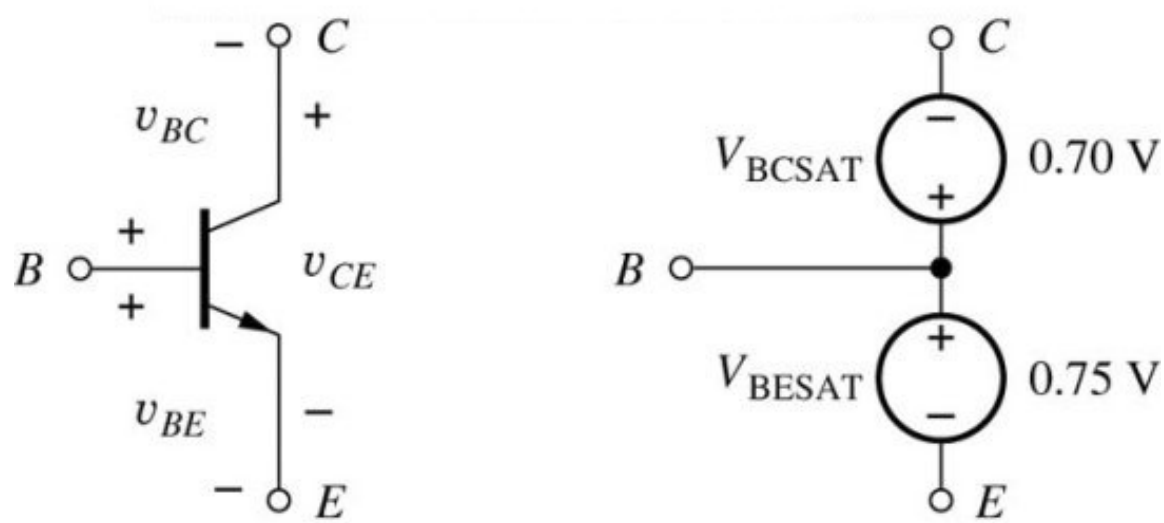

Jaeger, Blalock, Fig. 5.24

4.3.4 Single Transistor Amplifier Analysis

BJT Common-Emitter Amplifier

- Goal: Perform AC and DC analysis of single transistor circuit

DC Analysis:

1. Find equivalent circuit by replacing all capacitors with open circuits and inductors with short circuits
2. Find the Q-point from the DC equivalent circuit using appropriate large-signal model for the transistor

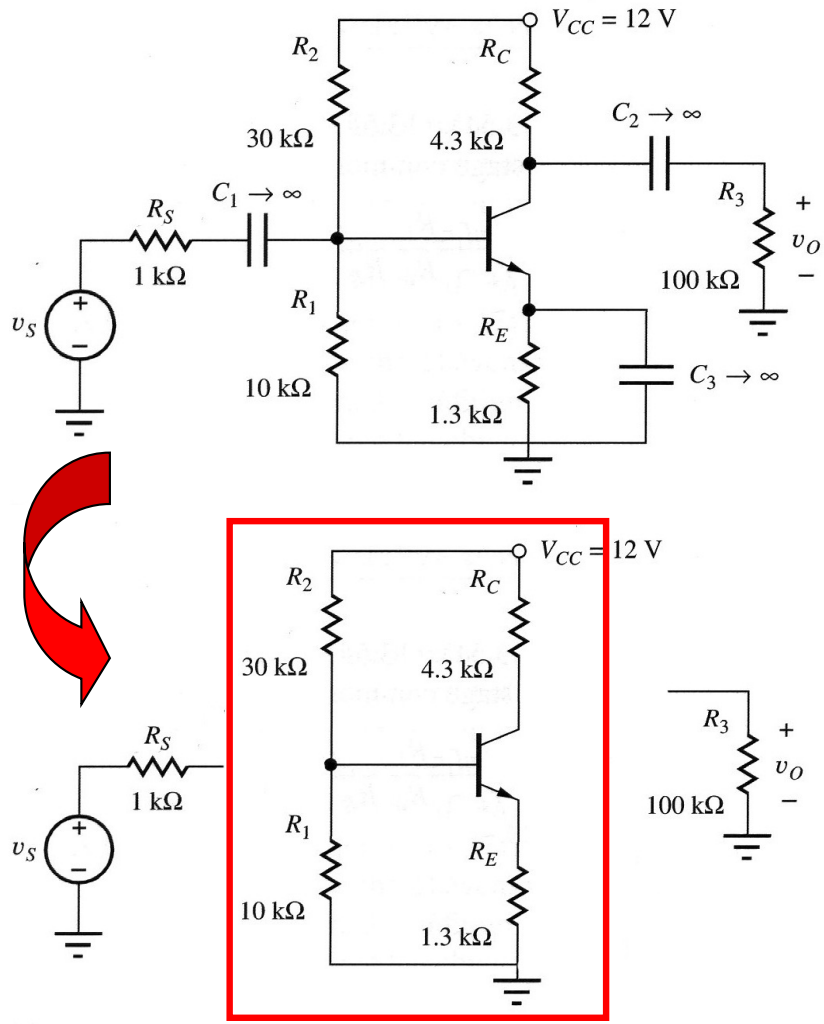

BJT – DC Analysis

- Four resistor bias network for BJT

DC Analysis

1. Split power supply into two equal voltage sources
2. Simplify base-bias network by Thévenin equivalent network

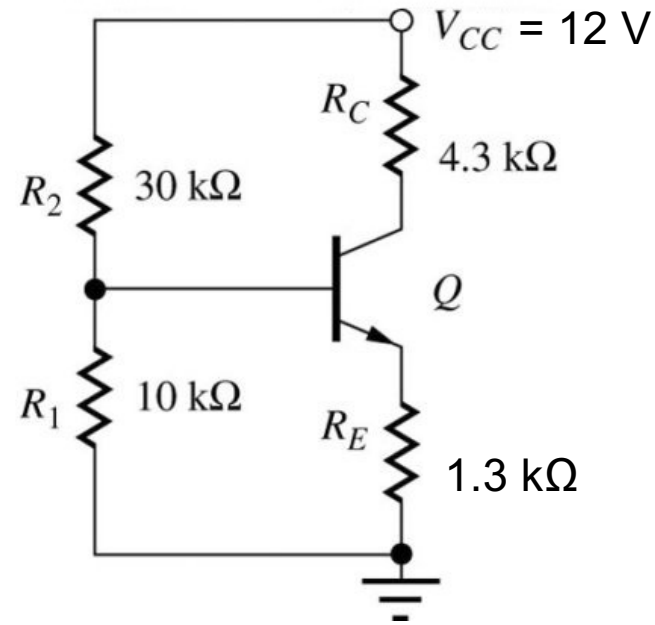

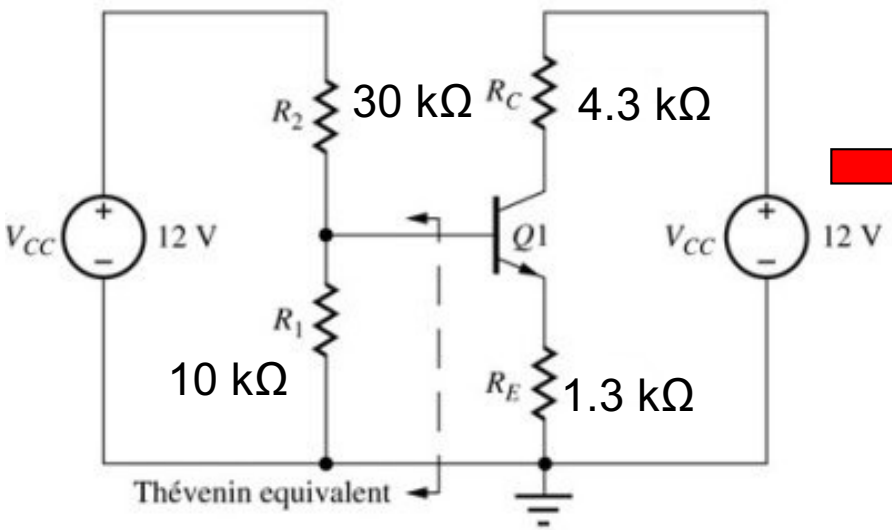

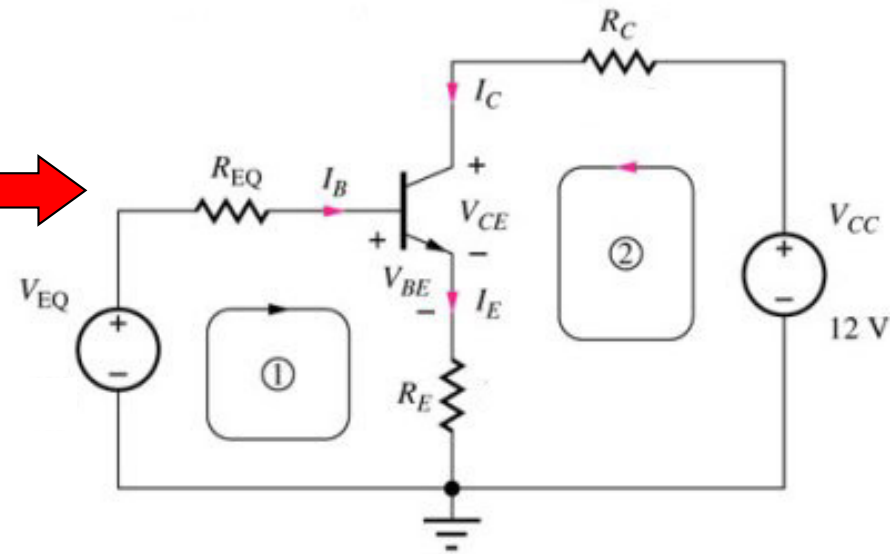

BJT DC Analysis
– Base-Bias Thévenin Equivalent –

- Thévenin equivalent circuit: any combination of batteries and resistances with two terminals can be replaced by a single voltage source V_{EQ} and a single series resistor R_{EQ}
- The value of V_{EQ} is the open circuit voltage at the terminals

$$V_{EQ} = \frac{R_1}{R_1 + R_2} V_{CC} = \frac{10}{40} 12V = 3V$$

- The value of R_{EQ} is V_{EQ} divided by the current with the terminals short circuited

$$R_{EQ} = \frac{V_{EQ}}{(V_{CC} / R_2)} = R_2 \frac{R_1}{R_1 + R_2} = 30 \frac{10}{40} k\Omega = 7.5\, k\Omega$$

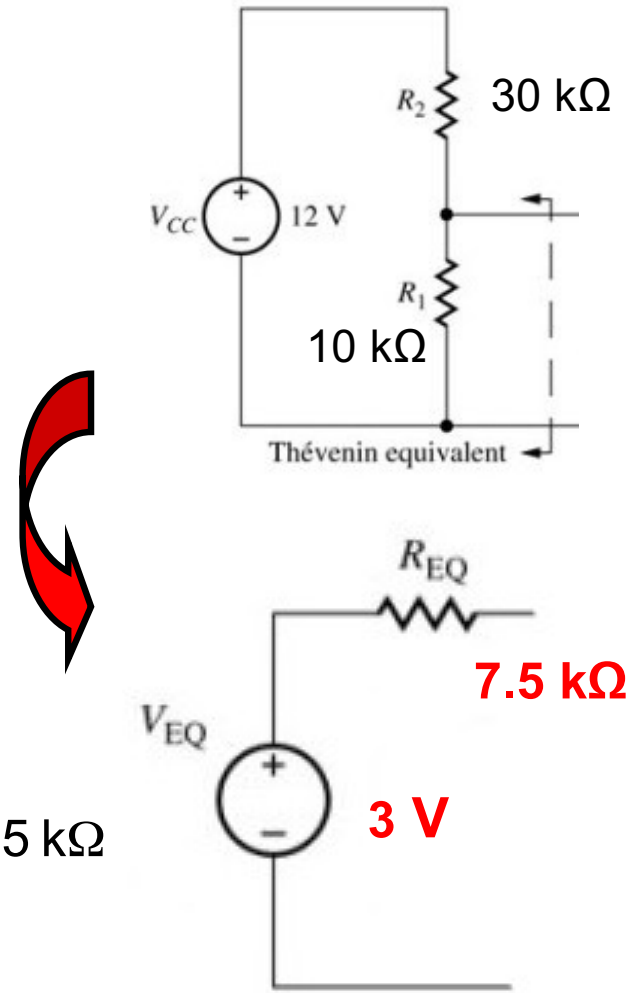

BJT DC Analysis

- Common-emitter gain: $\beta_F = 100$
- **Assumption**: Active Mode
- KVL for loop 1:

$$\left.\begin{aligned} V_{EQ} &= R_{EQ} I_B + V_{BE} + R_E I_E \\ V_{BE} &= 0.7\ \text{V} \\ I_E &= (\beta_F + 1)\, I_B \\ I_C &= \beta_F\, I_B \end{aligned}\right\} \begin{aligned} I_B &= 16.6\ \mu\text{A} \\ I_E &= 1.67\ \text{mA} \\ I_C &= 1.66\ \text{mA} \end{aligned}$$

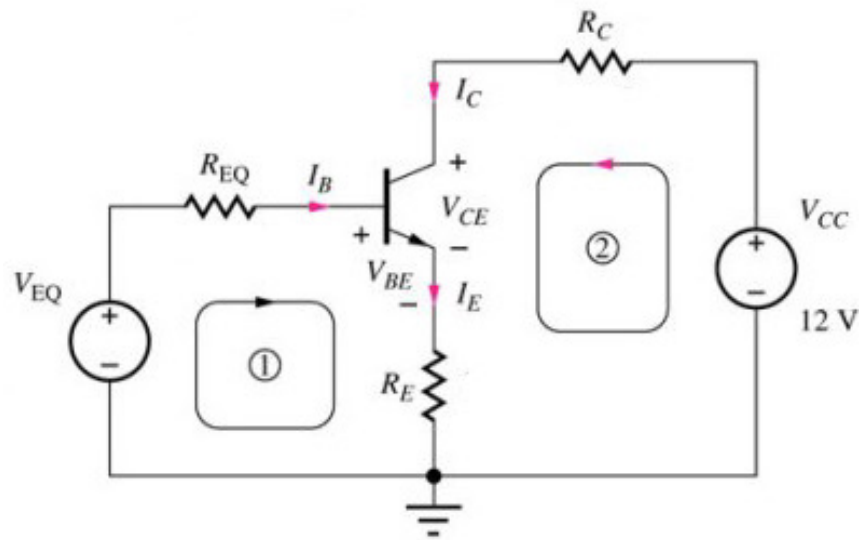

- KVL for loop 2:

$$\left.\begin{aligned} V_{CC} &= R_C I_C + V_{CE} + R_E I_E \\ I_C &= \beta_F\, I_B \end{aligned}\right\} V_{CE} = 2.7\ \text{V}$$

$$V_{BC} = -(V_{CE} - V_{BE}) = -2\ \text{V}$$

➡ Reverse biased C-B junction consistent with the assumption of npn BJT in active mode

- See also Jaeger, Blalock, 5.11.1

$V_{EQ} = 3$ V
$R_{EQ} = 7500\ \Omega$
$R_E = 1300\ \Omega$
$R_C = 4300\ \Omega$

How does the $I_C(V_{CE})$ plot look like?

BJT AC Analysis

- Find AC equivalent circuit by
  - replacing all capacitors by short circuits and all inductors by open circuits
  - replacing DC voltage sources by ground connections
  - replacing DC current sources by open circuits
- Replace transistor by its small-signal model (Hybrid-Pi)
- Simplify the resulting AC circuit as much as possible
  - Use Thévenin or Norton equivalent where necessary

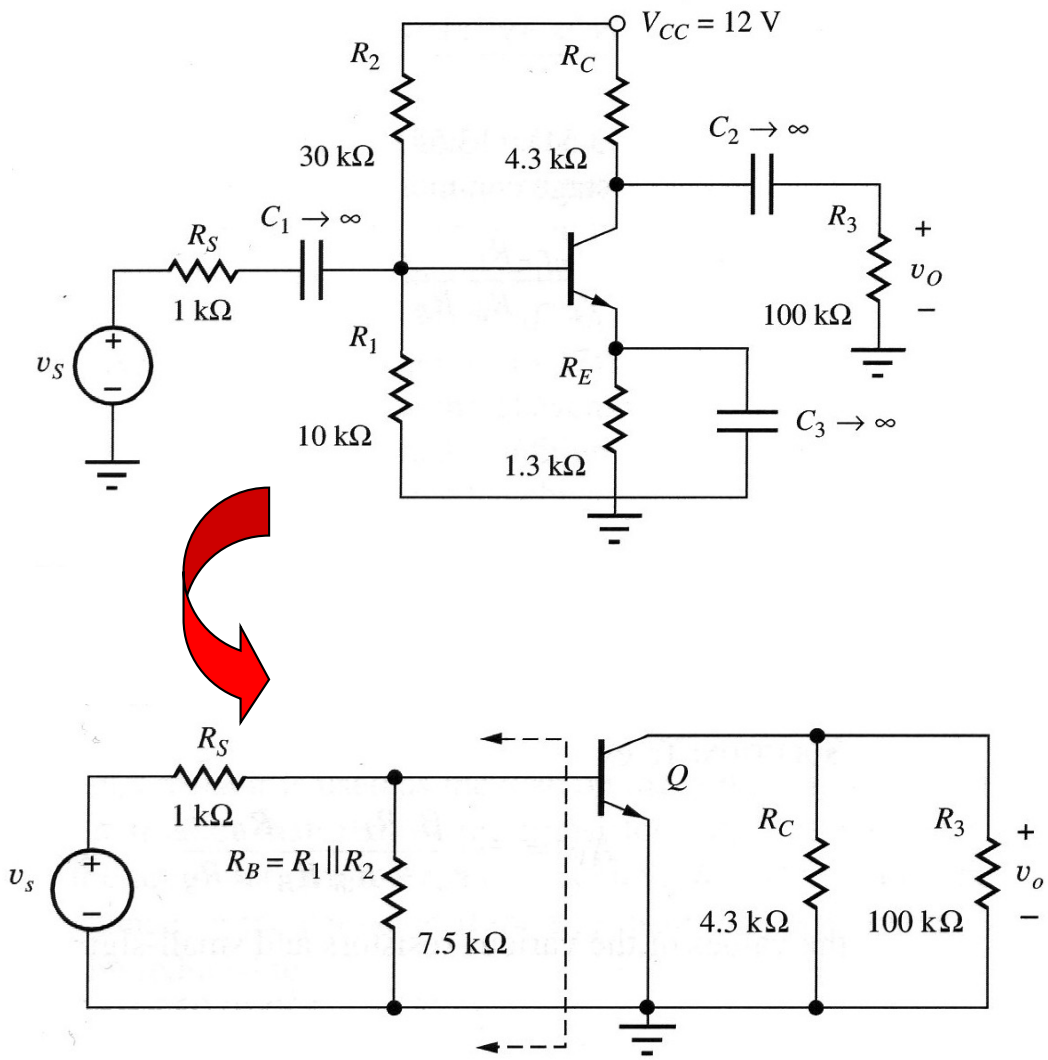

BJT AC Analysis
– Base-Bias Thévenin Equivalent –

- The value of V_{th} is the open circuit voltage at the terminals

$$V_{th} = \frac{R_B}{R_S + R_B} V_S = 0.88\ V_S$$

- The value of R_{th} is V_{th} divided by the current with the terminals short circuited

$$R_{th} = \frac{V_{th}}{(V_S / R_S)} = R_S \frac{R_B}{R_S + R_B}$$

$$= \frac{7.5}{8.5}\ k\Omega$$

$$= 0.88\ k\Omega$$

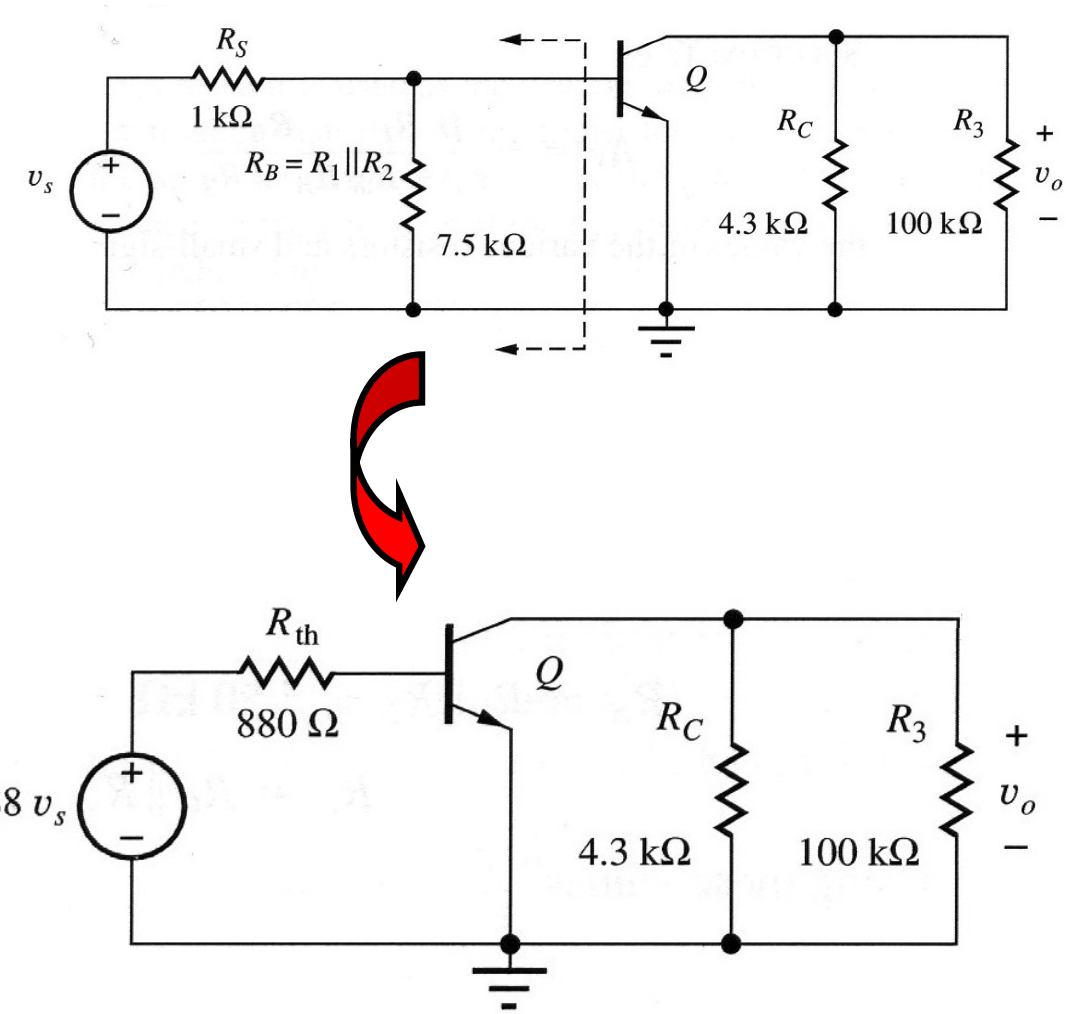

BJT AC Analysis
– Transistor Equivalent Circuit –

- Replace transistor with small-signal model
- Hybrid-Pi model with input resistance r_π, voltage controlled current source $g_m v_{be}$ and output resistor r_o
- How do you calculate the transistor model parameters?

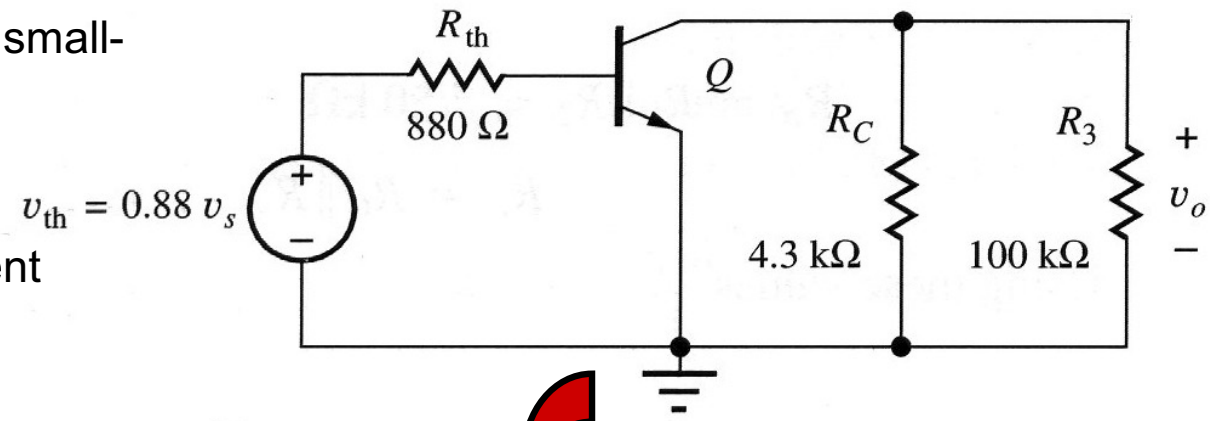

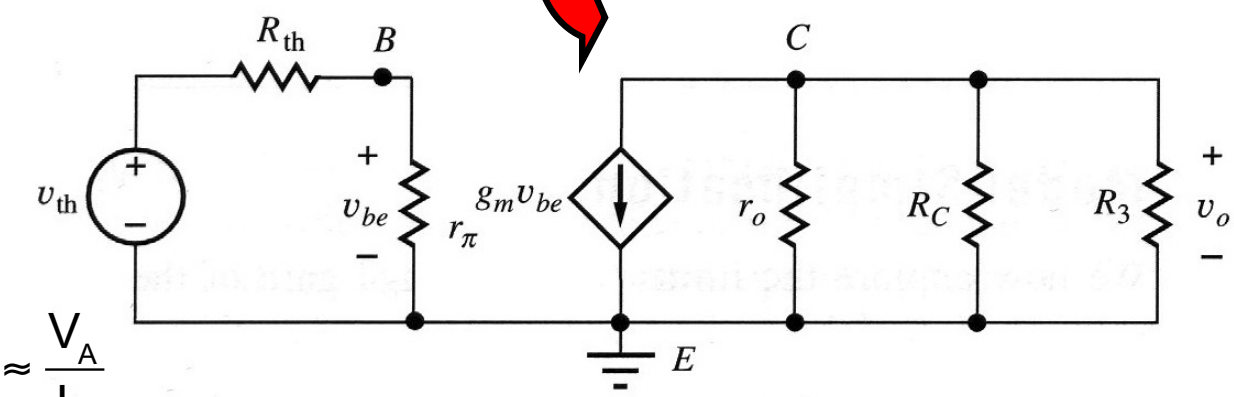

$$r_\pi = g_{11}^{-1} = \frac{\beta_0}{g_m}$$

$$g_m = g_{21} = \frac{q\, I_C}{kT}$$

$$r_o = (g_{22} + g_{12})^{-1} \overset{r_\mu = g_{12}^{-1} \to \infty}{\approx} g_{22}^{-1} \approx \frac{V_A}{I_C}$$

BJT AC Analysis
– Transistor Equivalent Circuit –

- Further simplify equivalent circuit

$$R_L = R_C \parallel R_3 \parallel r_o$$

$$= \left[\frac{1}{R_C} + \frac{1}{R_3} + \frac{1}{r_o}\right]^{-1}$$

$$R_{th} = 880\ \Omega$$

$$v_{th} = 0.88\ v_S$$

$$r_\pi = g_{11}^{-1} = \frac{\beta_0}{g_m}$$

$$g_m = g_{21} = \frac{q\,I_C}{kT}$$

$$r_o = (g_{22} + g_{12})^{-1} \overset{r_\mu = g_{12}^{-1} \to \infty}{\approx} g_{22}^{-1} \approx \frac{V_A}{I_C}$$

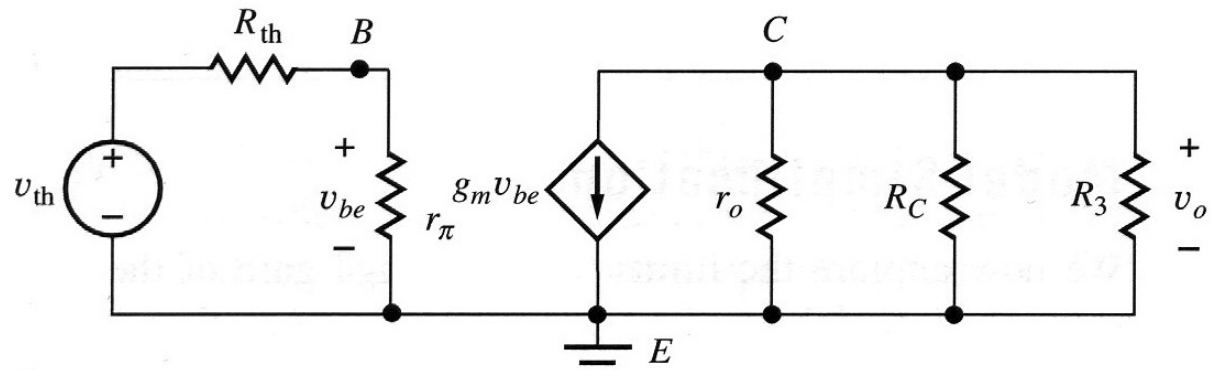

Assume: V_A = 75 V

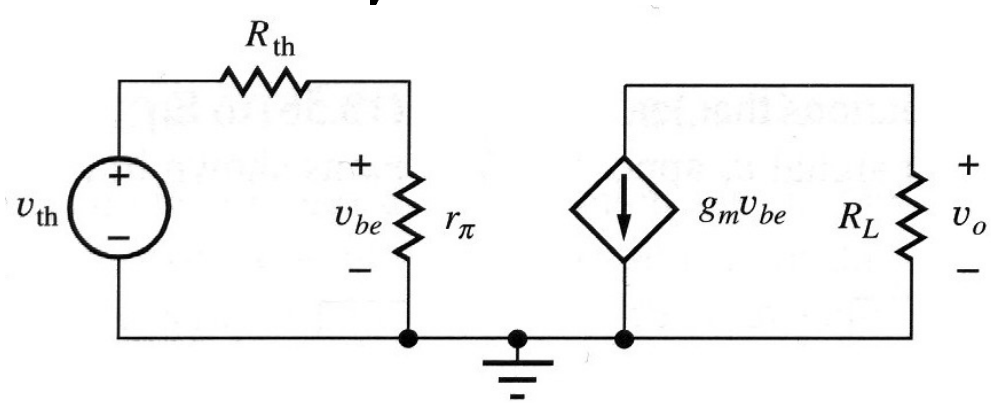

BJT AC Analysis
– Transistor Equivalent Circuit –

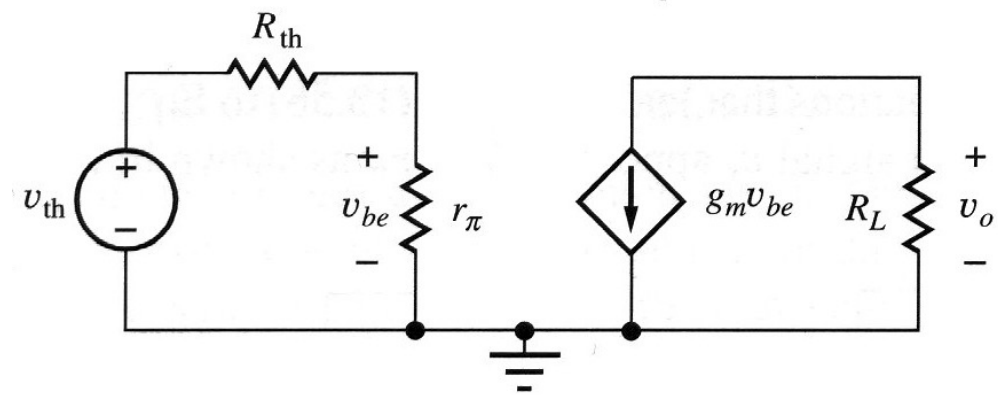

- And now calculate….

$$g_m = g_{21} = \frac{q\,I_C}{kT} = 0.064\ \text{S}$$

$$r_\pi = g_{11}^{-1} = \frac{\beta_0}{g_m} = 1566\ \Omega$$

$$r_o = (g_{22} + g_{12})^{-1} \overset{r_\mu = g_{12}^{-1} \to \infty}{\approx} g_{22}^{-1} \approx \frac{V_A}{I_C} = 45.2\ \text{k}\Omega$$

$$R_L = R_C \,||\, R_3 \,||\, r_o = \left[\frac{1}{R_C} + \frac{1}{R_3} + \frac{1}{r_o}\right]^{-1} = 3778\ \Omega$$

$$R_{th} = 880\ \Omega$$

$$v_{th} = 0.88\ v_S$$

Verification with SPICE
See Chapter 4.4

$$v_{be} = v_{th}\frac{r_\pi}{r_\pi + R_{th}} = 0.88\frac{r_\pi}{r_\pi + R_{th}} v_S = 0.56\ v_S$$

$$v_o = -R_L g_m v_{be} = -136.2\ v_S$$

$$A = v_o / v_S = -136.2$$

- And what about the frequency dependence?

BJT Analysis

– Bringing in the Physics –

- In the previous example, we assumed that $\beta_F = 100$ is known
- How can we calculate $\beta_F = \beta_0$ from the npn transistor geometry and material properties?

$$\beta_0 = \frac{1}{\left(\frac{D_E}{D_B}\frac{W}{L_E}\frac{N_B}{N_E}\right) + \frac{1}{2}\left(\frac{W}{L_B}\right)^2}$$

for the case of $W \ll L_B$